Odyssey Linear SM

Chandelier - B144

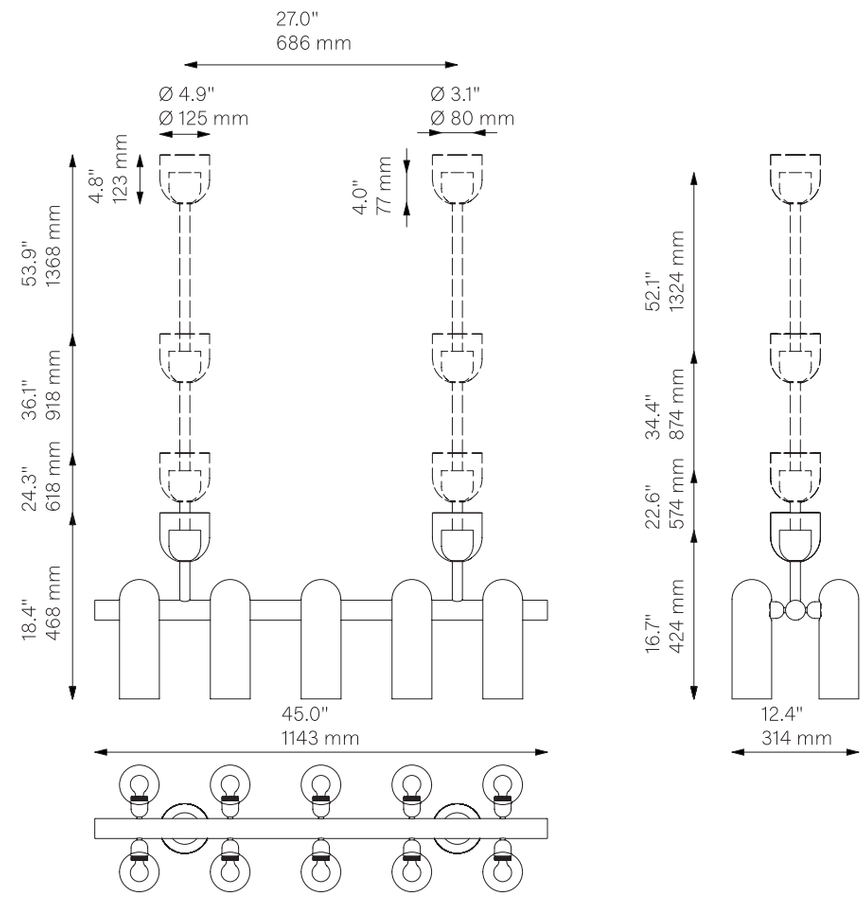

Glass Lampshades	10 x Ø 100 mm x H 300 mm / Ø 3.9" x H 11.8" [1] Triplex Opal Glass (acid etch on the outside) [2] Soda Lime Marble Matte Glass [3] Borosilicate Transparent Ribbon Glass (extra charge of 30%)		
Weight	17.6 kg / 38.8 lb		
Light Source	LED Bulb (included)	10 x 4 W	
	Max Wattage	10 x 15 W	
	Total Lumens	2200 lm	
	Color Temperature	2200-3000 K	
	Bulb Base	E14 / E12	
	Bulb Size	G45, max length 80 mm / 3.2"	
	Power Supply	230/120V CE/UL	
	Dimmable with electronic dimmers only (ELV, trailing edge)		
Finishes	LBB / Lacquered Burnished Brass BGM / Black Gunmetal PN / Polished Nickel (extra charge of 25%) Classic Bronze Heritage Bronze		
Extension Rods (Included)	2 x 150 mm 2 x 5.9"	2 x 300 mm 2 x 11.8"	2 x 450 mm 2 x 17.7"
Certified	CE/UL/SAA		
Ingress Protection	IP 20		

Odyssey Collection